TC-WLT-DM, TC-WTT-DM VALVE

3 WAY REDUCED PORT 1000 WOG BALL VALVE, THREADED "L" PORT, "T" PORT
(with ISO 5211 direct mount pad)

DESIGN FEATURES:

- Steam rating:150 psi WSP
- WORKING PRESSURE : 1000 PSI
- INVESTMENT CASTING BODY & CAP
- ME-PTFE SEAL KITS : REPLACES PTFE ,RPTFE AND FPA
  LOW DEFORMATION UNDER LOAD
  LOW PERMEATION
- TEMPERATURE RATING : -45.5°C (-50°F) to 246°C (475°F)
- FULL ISO-5211 PAD FOR DIRECT MOUNT AUTOMATION
- HANDLE WITH LOCKING DEVICE
- ADJUSTABLE STEM PACKING
- BLOW - OUT- PROOF STEM
- ANTI - STATIC DEVICE
- LONG CYCLE LIFE
- TEST STANDARD:API 598
- End Connections: Threaded End
  Socket-Weld End
  Butt-Weld End

POSITION	A	B	C	D
L PORT	1 2 3	1 2 3	1 2 3	1 2 3
T PORT	1 2 3	1 2 3	1 2 3	1 2 3

MATERIALS LIST

NO.	PART NAME	MATERIAL	Q'TY
1	BODY	ASTM A351 Gr.CF8M	1
2	CAP	ASTM A351 Gr.CF8M	2
3	SEAT	ME-PTFE	4
4	BALL	ASTM A351 Gr.CF8M	1
5	STEM	SS316	1
6	GASKET	ME-PTFE	2
7	THRUST WASHER	ME-PTFE	1
8	STEM PACKING	ME-PTFE	1
9	GLAND BUSH	SS304	1
10	BELLEVEILLE WASHER	SUS304-CSP	2
11	HANDLE NUT	SS304	1
12	HANDLE	SS304	1
13	HANDLE NUT	SS304	1
14	STOP PIN	SS304	1
15	HANDLE SLEEVE	PLASTIC	1
16	STOP WASHER	SS304	1
17	THRUSP WASHER	ME-PTFE	1
18	O-RING	VITON	1
19	END CAP	ASTM A351 Gr. CF8M	1
20	GASKET	ME-PTFE	2

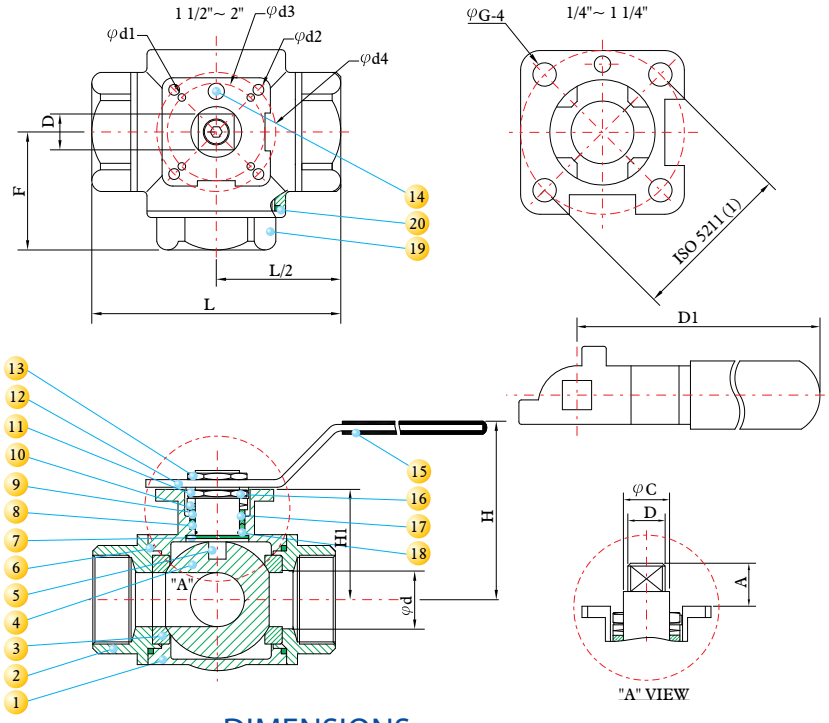

PRESSURE TEMPERATURE RATINGS

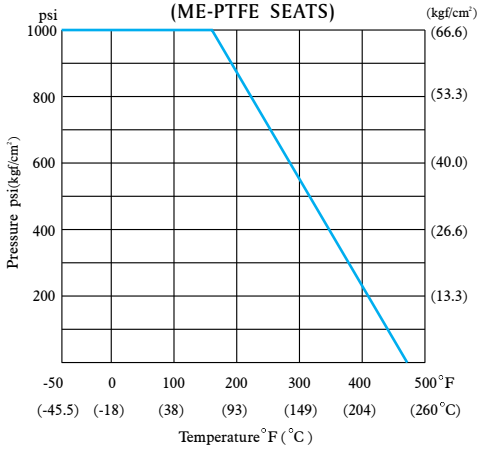

DIMENSIONS

SIZE		A		C		D		F		H		L		D1		H1		d		d1		d2		d3		d4		ISO 5211	Cv	Weight	
inch	mm	inch	mm	inch	mm	inch	mm	inch	mm	inch	mm	inch	mm	inch	mm	inch	mm	inch	mm	inch	mm	inch	mm	inch	mm	inch	mm		Factor	Kg	Lb
1/4"	8	0.33	8.5	0.47	12.0	0.35	9.0	1.47	37.25	3.05	77.45	2.98	75.7	4.41	112.0	15.03	38.2	0.43	11.0			0.24	6.0			1.65	42	F04	6	0.75	1.65
3/8"	10	0.33	8.5	0.47	12.0	0.35	9.0	1.47	37.25	3.05	77.45	2.98	75.7	4.41	112.0	15.03	38.2	0.43	11.0			0.24	6.0			1.65	42	F04	6	0.75	1.65
1/2"	15	0.33	8.5	0.47	12.0	0.35	9.0	1.47	37.25	3.05	77.45	2.98	75.7	4.41	112.0	15.03	38.2	0.50	12.7			0.24	6.0			1.65	42	F04	12	0.75	1.65
3/4"	20	0.33	8.5	0.47	12.0	0.35	9.0	1.76	44.7	3.22	82.00	3.40	86.6	4.41	112.0	1.78	45.2	0.63	16.0			0.24	6.0			1.65	42	F04	16	1.07	2.36
1"	25	0.44	11.4	0.62	15.8	0.43	11.0	2.02	51.4	3.69	93.70	4.03	102.4	5.37	136.5	2.22	56.5	0.79	20.0			0.28	7.1			1.97	50	F05	20	1.68	3.70
1 1/4"	32	0.44	11.4	0.62	15.8	0.43	11.0	2.27	57.7	3.98	101.1	4.65	118.2	7.40	188.0	2.44	61.9	0.98	25.0			0.28	7.1			1.97	50	F05	37	2.44	5.37
1 1/2"	40	0.55	14.0	0.82	20.8	0.55	14.0	2.47	62.7	4.73	120.25	4.95	125.8	7.78	197.5	3.08	78.25	1.26	32.0	0.28	7.1	0.36	9.2	1.97	50	2.76	70	F05/F07	103	3.61	7.95
2"	50	0.55	13.7	0.82	20.8	0.55	14.0	2.94	74.6	5.11	129.85	5.87	149.0	7.78	197.5	3.44	87.35	1.50	38.1	0.28	7.1	0.36	9.2	1.97	50	2.76	70	F05/F07	143	5.81	12.80